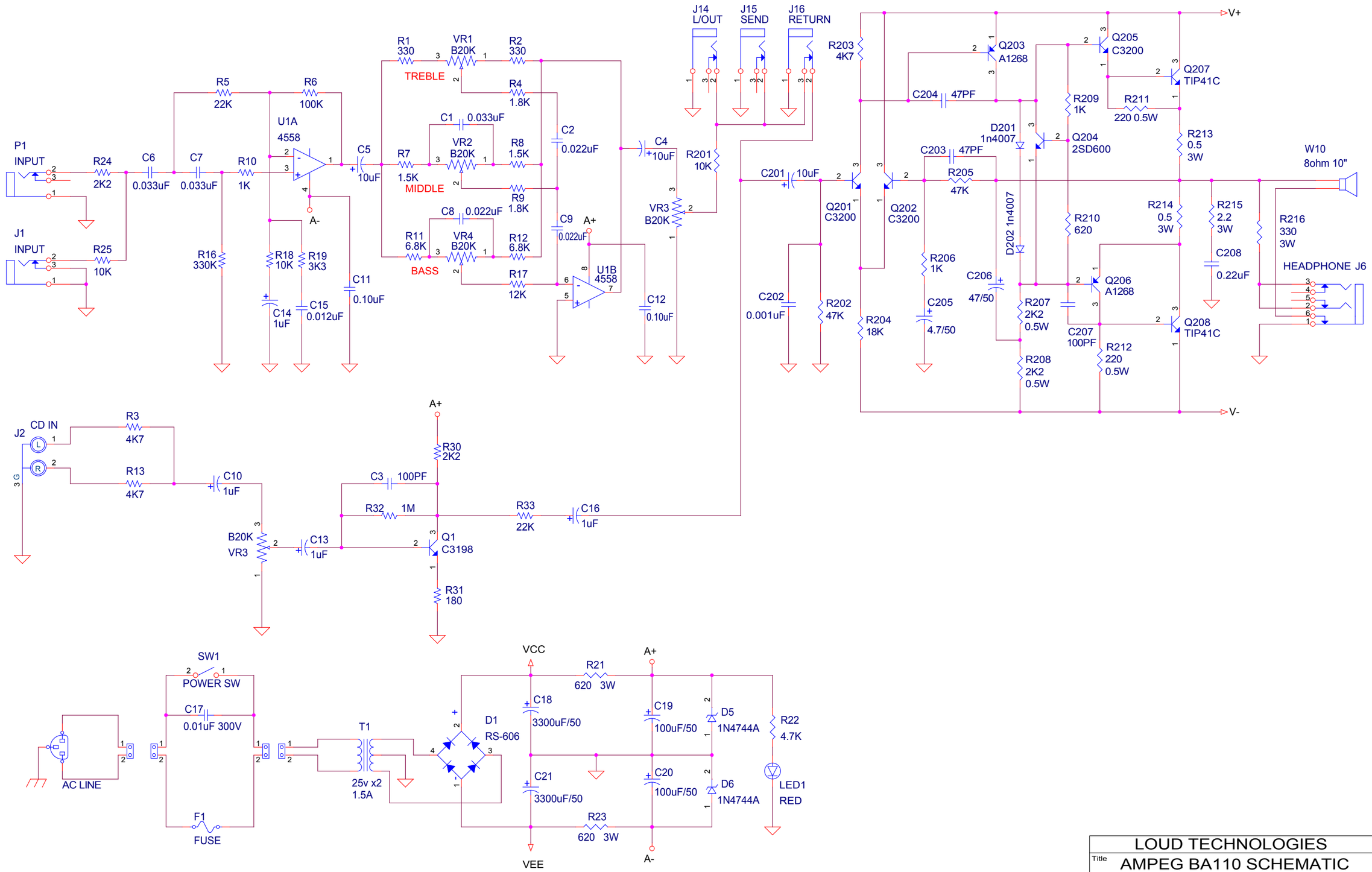

LOUD TECHNOLOGIES		
Title: AMPEG BA110 SCHEMATIC		
Size	Document Number: 2037250-XX	Rev 1
Date: 16 FEB 2011	Sheet 1 of 1	