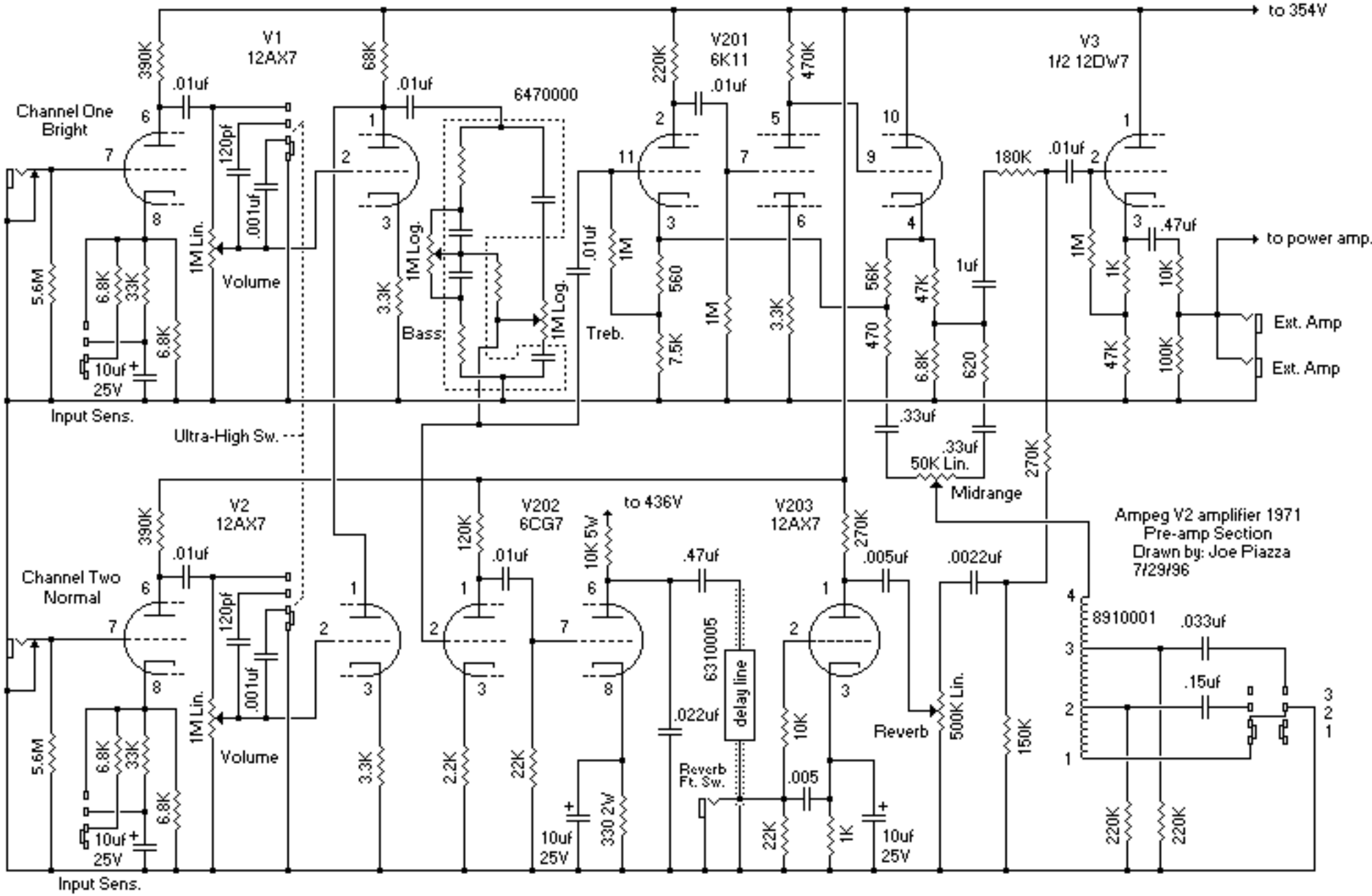
to 354V
V1
12AX7
V201
6K11
V3
1/2 12DW7
Channel One
Bright
390K
.01uf
68K
220K
470K
180K
120pf
.001uf
1M Lin.
Volume
6470000
1M Log.
Bass
Treb.
560
7.5K
1M
3.3K
56K
47K
470
6.8K
620
1uf
.47uf
1K
10K
100K
to power amp.
Ext. Amp
Ext. Amp
5.6M
33K
10uf
25V
Input Sens.
Ultra-High Sw.
.33uf
50K Lin.
Midrange
270K
V2
12AX7
V202
6CG7
to 436V
V203
12AX7
Channel Two
Normal
120K
10K 5W
.005uf
.0022uf
Ampeg V2 amplifier 1971
Pre-amp Section
Drawn by: Joe Piazza
7/29/96
8910001
.033uf
.15uf
6310005
delay line
.022uf
Reverb
500K Lin.
150K
Reverb
Ft. Sw.
.005
2.2K
22K
330 2W
220K

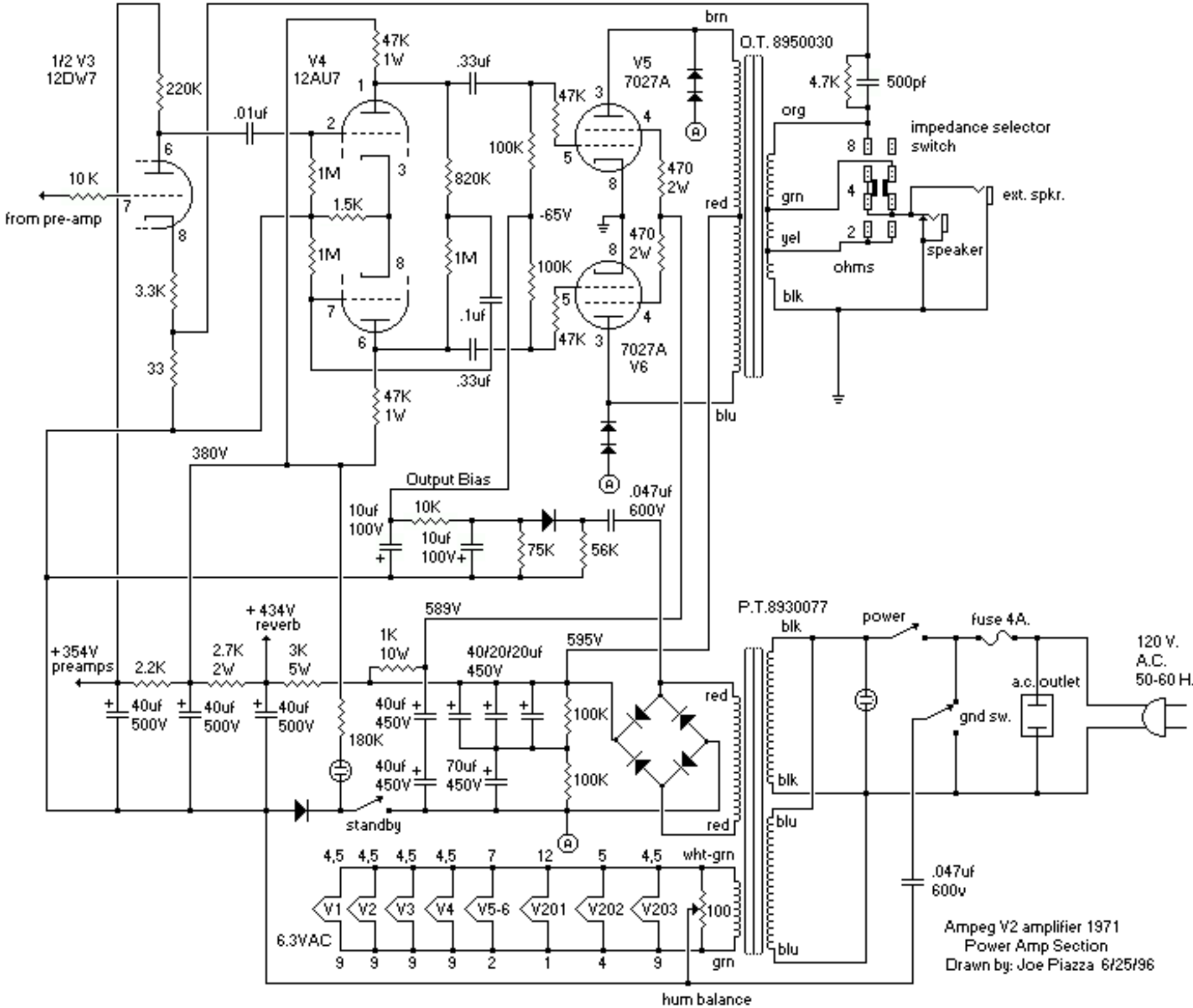
1/2 V3
12DW7
220K
.01uf
V4
12AU7
47K
1W
.33uf
V5
7027A
brn
O.T. 8950030
4.7K
500pf
org
impedance selector
switch
10 K
from pre-amp
1M
1.5K
820K
100K
47K
470
2W
-65V
red
grn
yel
ohms
blk
ext. spkr.
speaker
3.3K
33
.1uf
7027A
V6
blu
380V
Output Bias
10uf
100V
10K
75K
56K
.047uf
600V
+ 434V
reverb
589V
595V
P.T.8930077
power
fuse 4A.
120 V.
A.C.
50-60 H.
+354V
preamps
2.2K
2.7K
2W
3K
5W
1K
10W
40/20/20uf
450V
40uf
500V
180K
70uf
450V
a.c. outlet
gnd sw.
standby
wht-grn
V1
V2
V3
V4
V5-6
V201
V202
V203
100
6.3VAC
hum balance
.047uf
600v
Ampeg V2 amplifier 1971
Power Amp Section
Drawn by: Joe Piazza 6/25/96