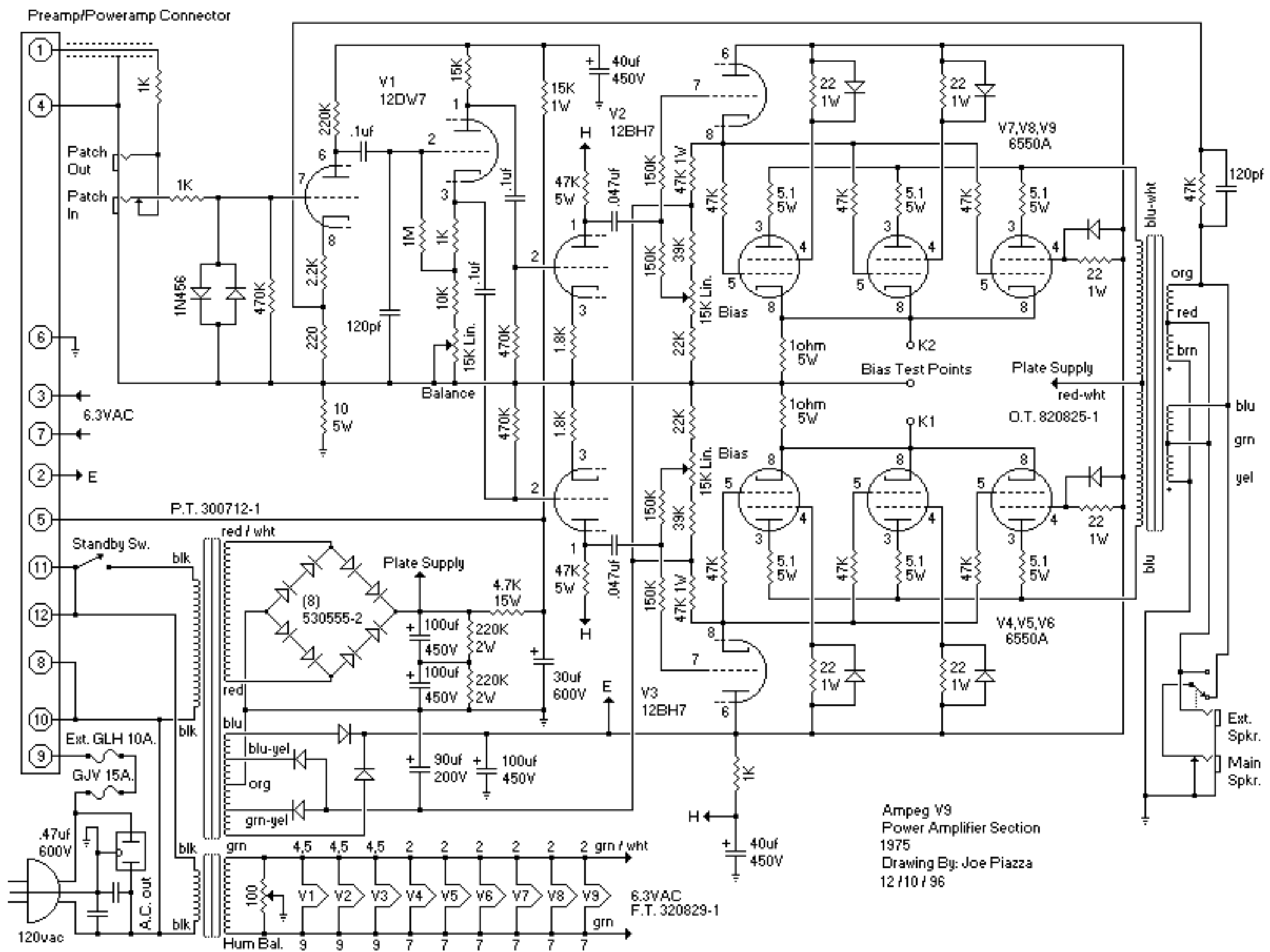
Preamp/Poweramp Connector
Patch Out
Patch In
1K
1N456
470K
220K
.1uf
V1
12DW7
15K
1M
1K
10K
15K Lin.
Balance
2.2K
220
10
5W
120pf
6.3VAC
E
P.T. 300712-1
Standby Sw.
red / wht
blk
(8)
530555-2
Plate Supply
100uf
450V
4.7K
15W
220K
2W
30uf
600V
red
blu
blu-yel
org
grn-yel
90uf
200V
100uf
450V
Ext. GLH 10A.
GJV 15A.
.47uf
600V
A.C. out
120vac
grn
4,5
2
grn / wht
100
Hum Bal.
V1
V2
V3
V4
V5
V6
V7
V8
V9
6.3VAC
F.T. 320829-1
40uf
450V
15K
1W
V2
12BH7
47K
5W
.047uf
150K
47K 1W
39K
22K
1ohm
5W
Bias
K2
K1
Bias Test Points
V3
12BH7
V7,V8,V9
6550A
V4,V5,V6
6550A
5.1
5W
22
1W
Plate Supply
red-wht
O.T. 820825-1
blu-wht
org
red
brn
blu
grn
yel
120pf
Ext. Spkr.
Main Spkr.
Ampeg V9
Power Amplifier Section
1975
Drawing By: Joe Piazza
12 / 10 / 96

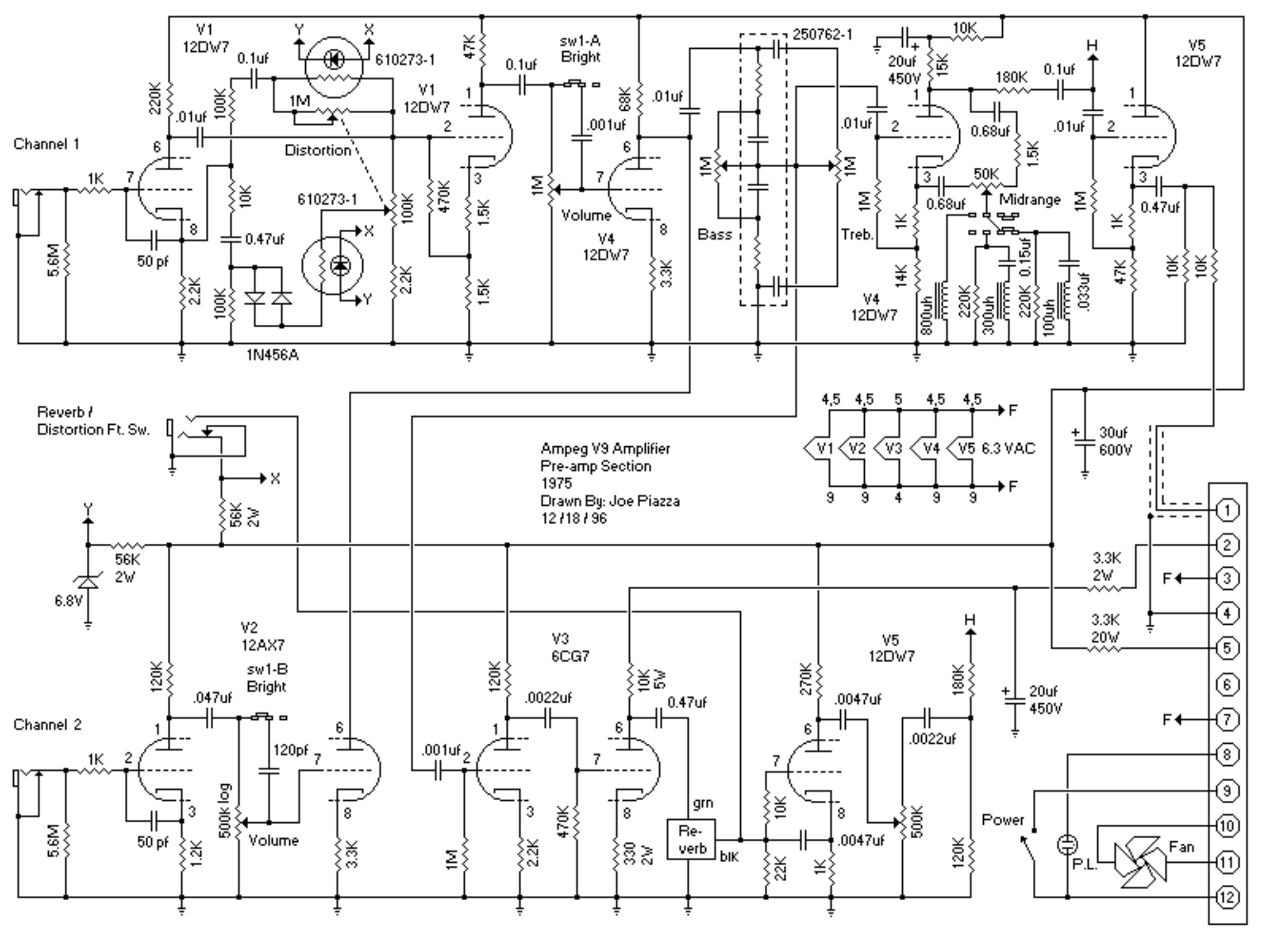
Ampeg V9 Amplifier
Pre-amp Section
1975
Drawn By: Joe Piazza
12/18/96
Channel 1
Channel 2
V1
12DW7
V2
12AX7
V3
6CG7
V4
12DW7
V5
12DW7
610273-1
250762-1
sw1-A
Bright
sw1-B
Bright
Distortion
Volume
Bass
Treb.
Midrange
Reverb /
Distortion Ft. Sw.
Re-
verb
grn
blk
Power
P.L.
Fan
1N456A
6.3 VAC
30uf
600V
20uf
450V
3.3K
2W
3.3K
20W
56K
2W
6.8V