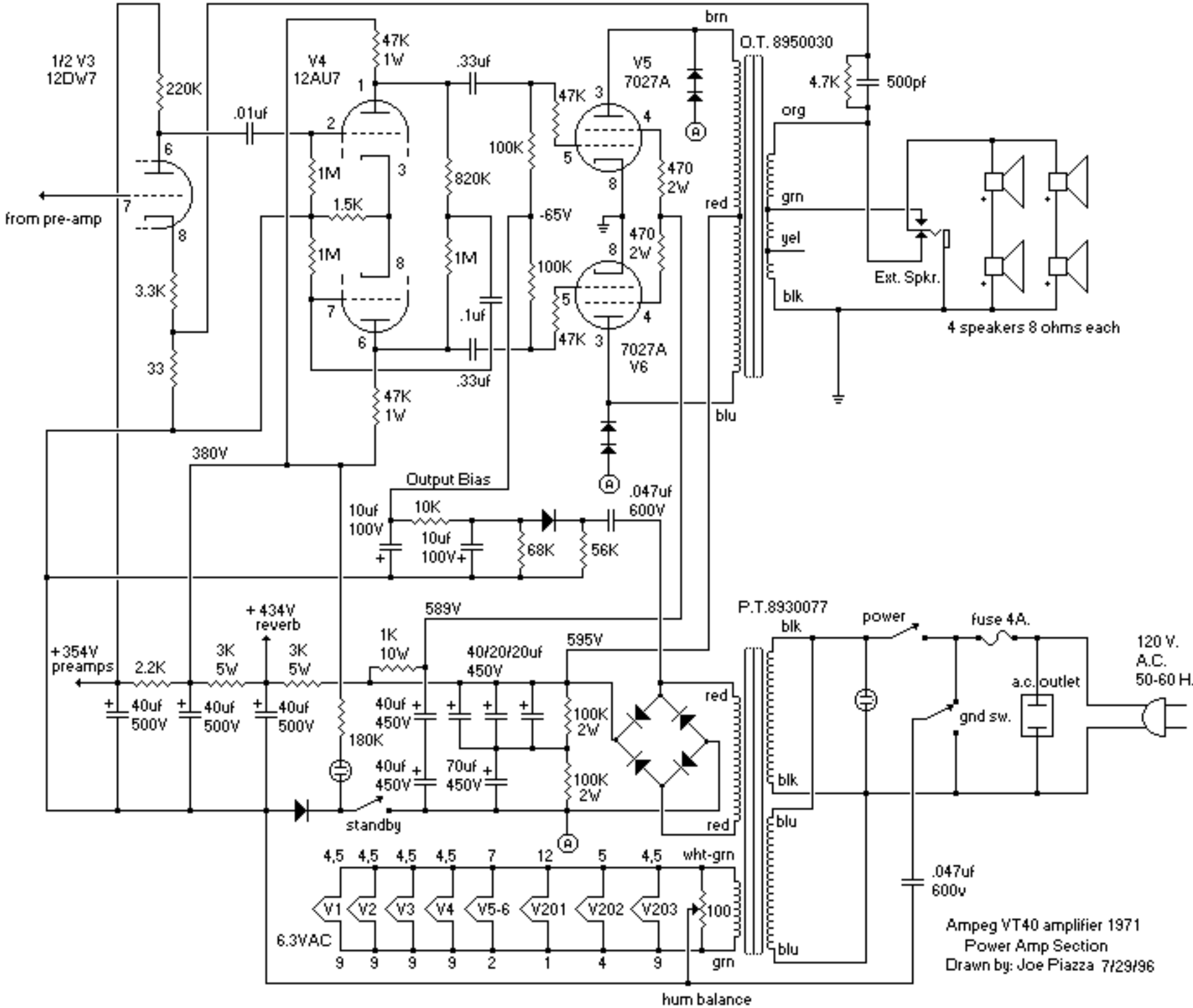
1/2 V3
12DW7
220K
.01uf
from pre-amp
3.3K
33
V4
12AU7
47K
1W
1M
1.5K
1M
47K
1W
380V
.33uf
820K
1M
.1uf
.33uf
100K
-65V
100K
47K
V5
7027A
470
2W
470
2W
7027A
V6
brn
red
blu
O.T. 8950030
4.7K
500pf
org
grn
yel
blk
Ext. Spkr.
4 speakers 8 ohms each
Output Bias
10uf
100V
10K
10uf
100V
68K
56K
.047uf
600V
+354V
preamps
2.2K
3K
5W
3K
5W
+ 434V
reverb
40uf
500V
40uf
500V
40uf
500V
180K
standby
1K
10W
589V
40uf
450V
40/20/20uf
450V
40uf
450V
70uf
450V
595V
100K
2W
100K
2W
red
red
P.T.8930077
blk
blk
blu
blu
power
fuse 4A.
a.c. outlet
gnd sw.
120 V.
A.C.
50-60 H.
.047uf
600v
4,5 4,5 4,5 4,5 7 12 5 4,5 wht-grn
V1 V2 V3 V4 V5-6 V201 V202 V203 100
6.3VAC
9 9 9 9 2 1 4 9 grn
hum balance
Ampeg VT40 amplifier 1971
Power Amp Section
Drawn by: Joe Piazza 7/29/96

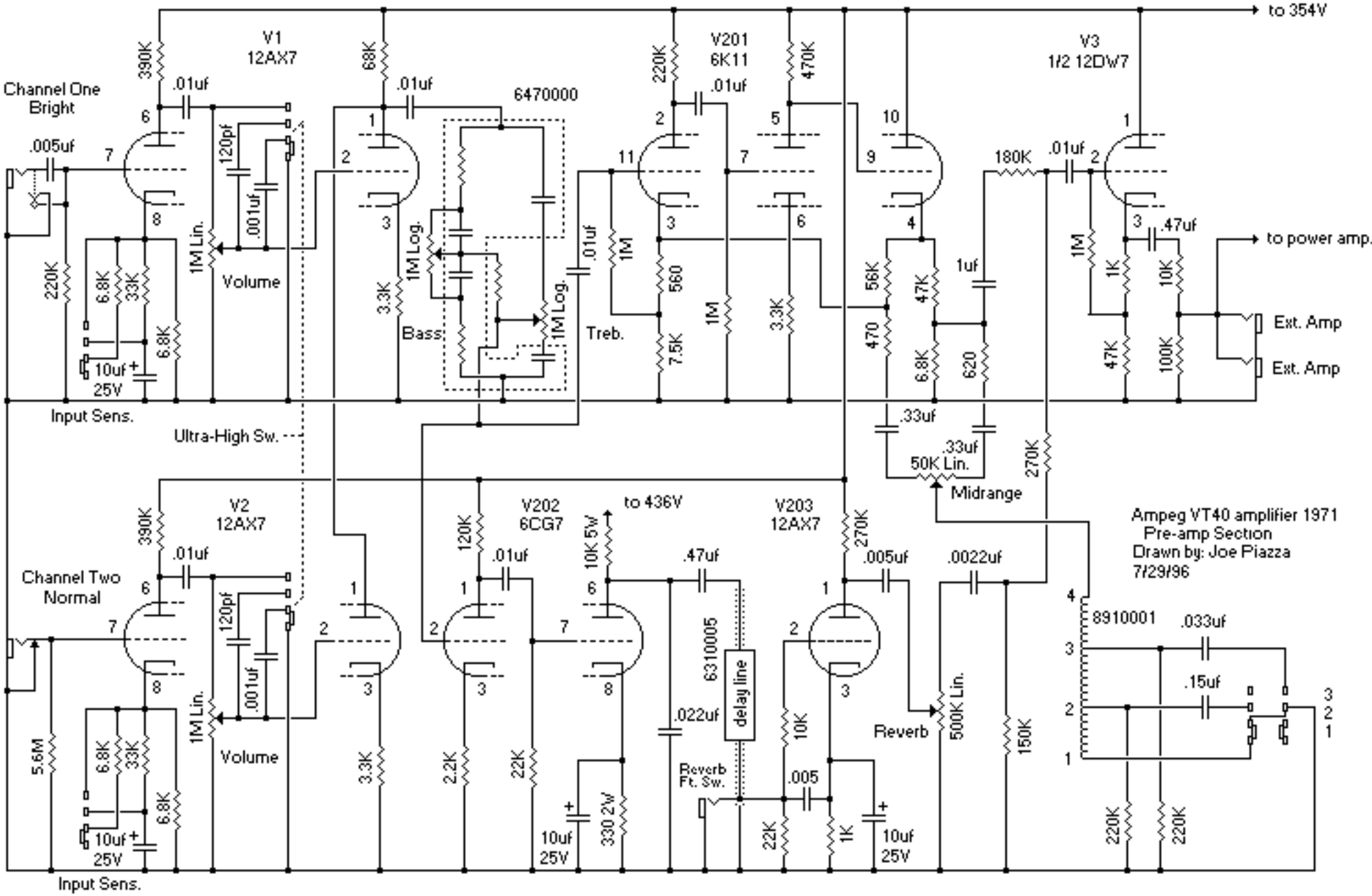
to 354V
V1
12AX7
V201
6K11
V3
1/2 12DW7
Channel One
Bright
390K
.01uf
68K
.01uf
6470000
220K
.01uf
470K
180K
.01uf
.005uf
120pf
.001uf
1M Lin.
Volume
220K
6.8K
33K
6.8K
10uf
25V
Input Sens.
3.3K
1M Log.
Bass
1M Log.
.01uf
Treb.
1M
560
7.5K
1M
3.3K
56K
470
47K
6.8K
1uf
620
.33uf
.33uf
50K Lin.
Midrange
270K
1M
1K
.47uf
10K
47K
100K
to power amp.
Ext. Amp
Ext. Amp
Ultra-High Sw.
V2
12AX7
V202
6CG7
to 436V
V203
12AX7
Ampeg VT40 amplifier 1971
Pre-amp Section
Drawn by: Joe Piazza
7/29/96
390K
.01uf
120K
.01uf
10K 5W
.47uf
270K
.005uf
.0022uf
Channel Two
Normal
120pf
.001uf
1M Lin.
Volume
5.6M
6.8K
33K
6.8K
10uf
25V
Input Sens.
3.3K
2.2K
22K
10uf
25V
330 2W
6310005
delay line
.022uf
Reverb
Ft. Sw.
10K
.005
22K
1K
10uf
25V
Reverb
500K Lin.
150K
8910001
.033uf
.15uf
220K
220K