FENDER MODEL "BANDMASTER-AMP AC 568" SCHEMATIC P/B NOTICE

THIS PRODUCT MANUFACTURED UNDER ONE OR MORE OF THE FOLLOWING U.S PATENTS - #2817708, #2973681, 192859 #PATENTS PENDING
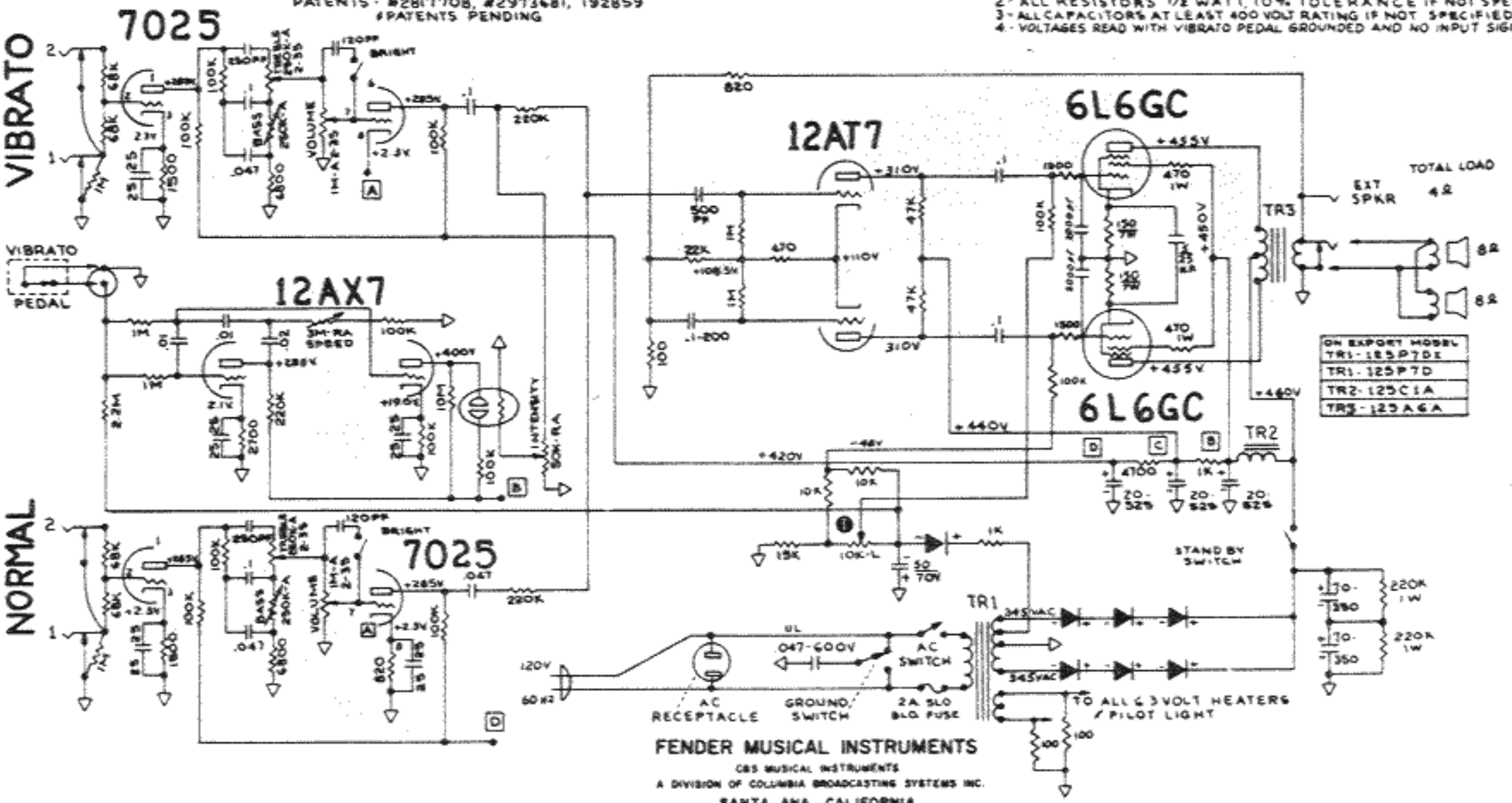
1- VOLTAGES READ TO GROUND WITH ELECTRONIC VOLTMETER VALUES SHOWN + OR - 20%
2- ALL RESISTORS 1/2 WATT, 10% TOLERANCE IF NOT SPECIFIED
3- ALL CAPACITORS AT LEAST 400 VOLT RATING IF NOT SPECIFIED
4- VOLTAGES READ WITH VIBRATO PEDAL GROUNDED AND NO INPUT SIGNAL