6A-15RVT

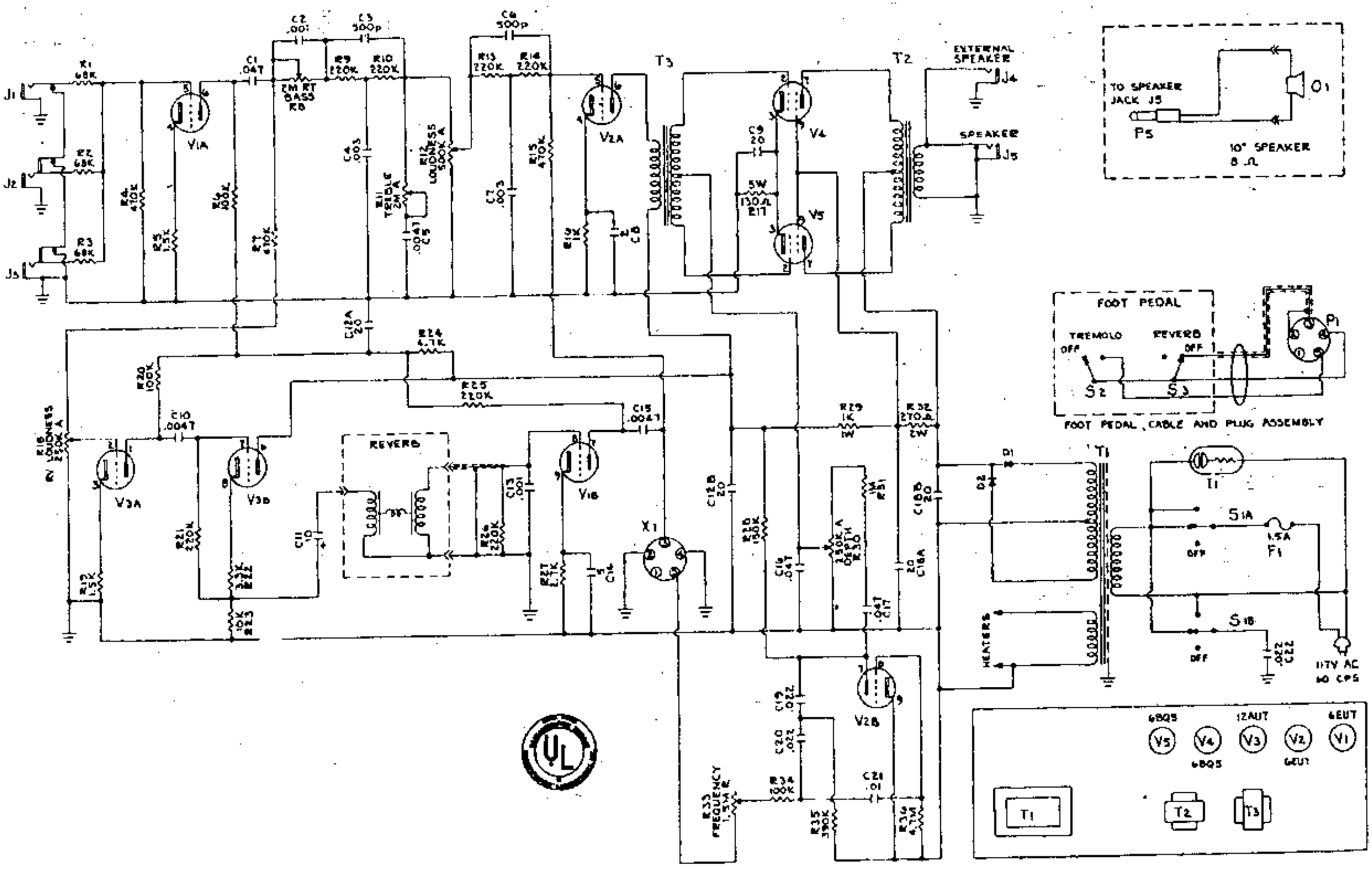
EXTERNAL SPEAKER
J4
SPEAKER
J5
T3
T2
V1A
V2A
V3A
V3B
V1B
V2B
V4
V5
REVERB
X1
TO SPEAKER JACK J5
P5
O1
10" SPEAKER 8 Ω
FOOT PEDAL
TREMOLO
OFF
REVERB
OFF
S2
S3
P1
FOOT PEDAL, CABLE AND PLUG ASSEMBLY
T1
S1A
S1B
F1
1.5A
OFF
HEATERS
117V AC 60 CPS
6BQ5
12AUT
6EUT
V5
V4
V3
V2
V1
T1
T2
T3