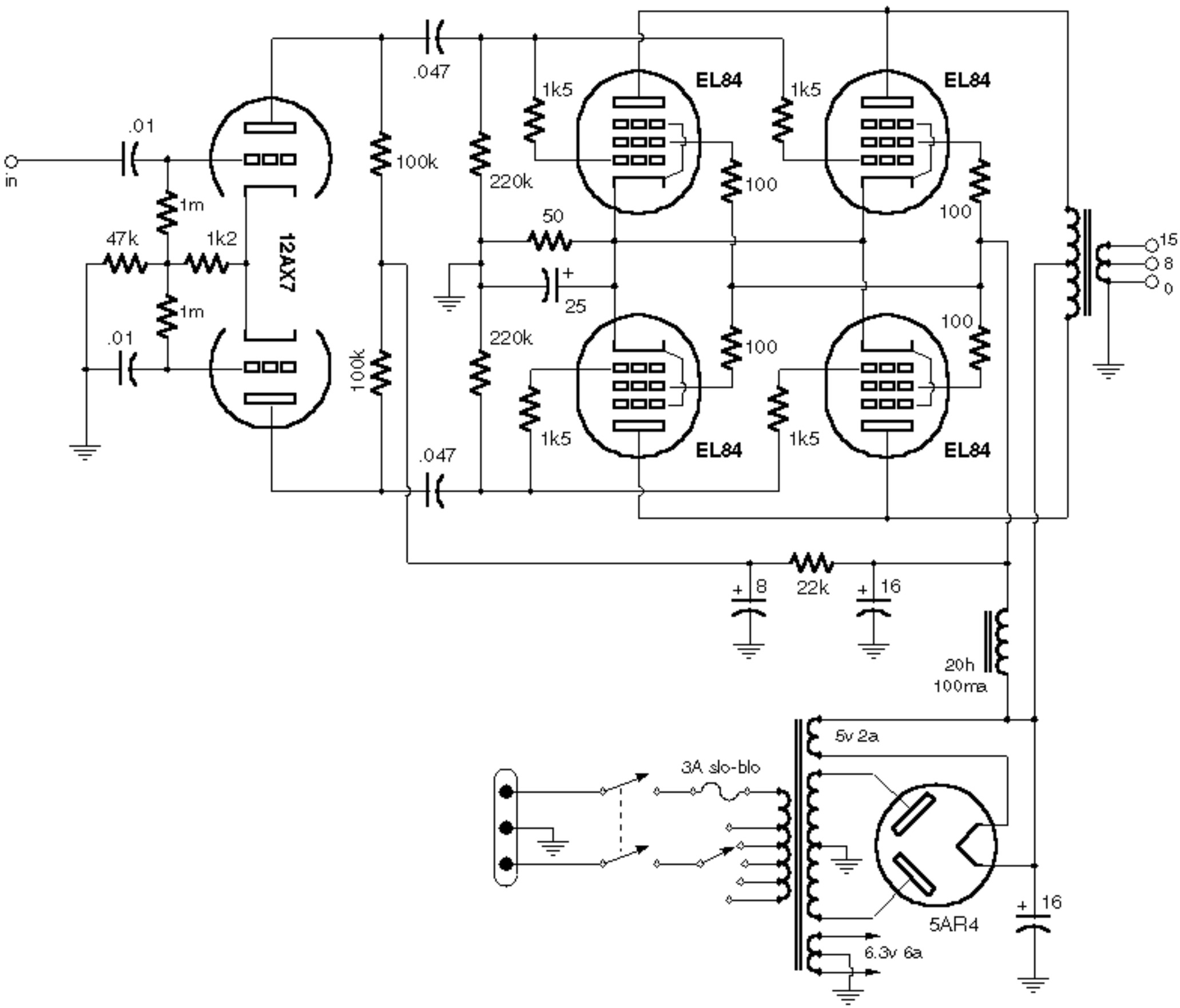
in
.01
1m
47k
1k2
1m
.01
12AX7
100k
100k
.047
.047
220k
220k
1k5
1k5
1k5
1k5
EL84
EL84
EL84
EL84
100
100
100
100
50
25
15
8
0
8
22k
16
20h
100ma
5v 2a
3A slo-blo
5AR4
16
6.3v 6a