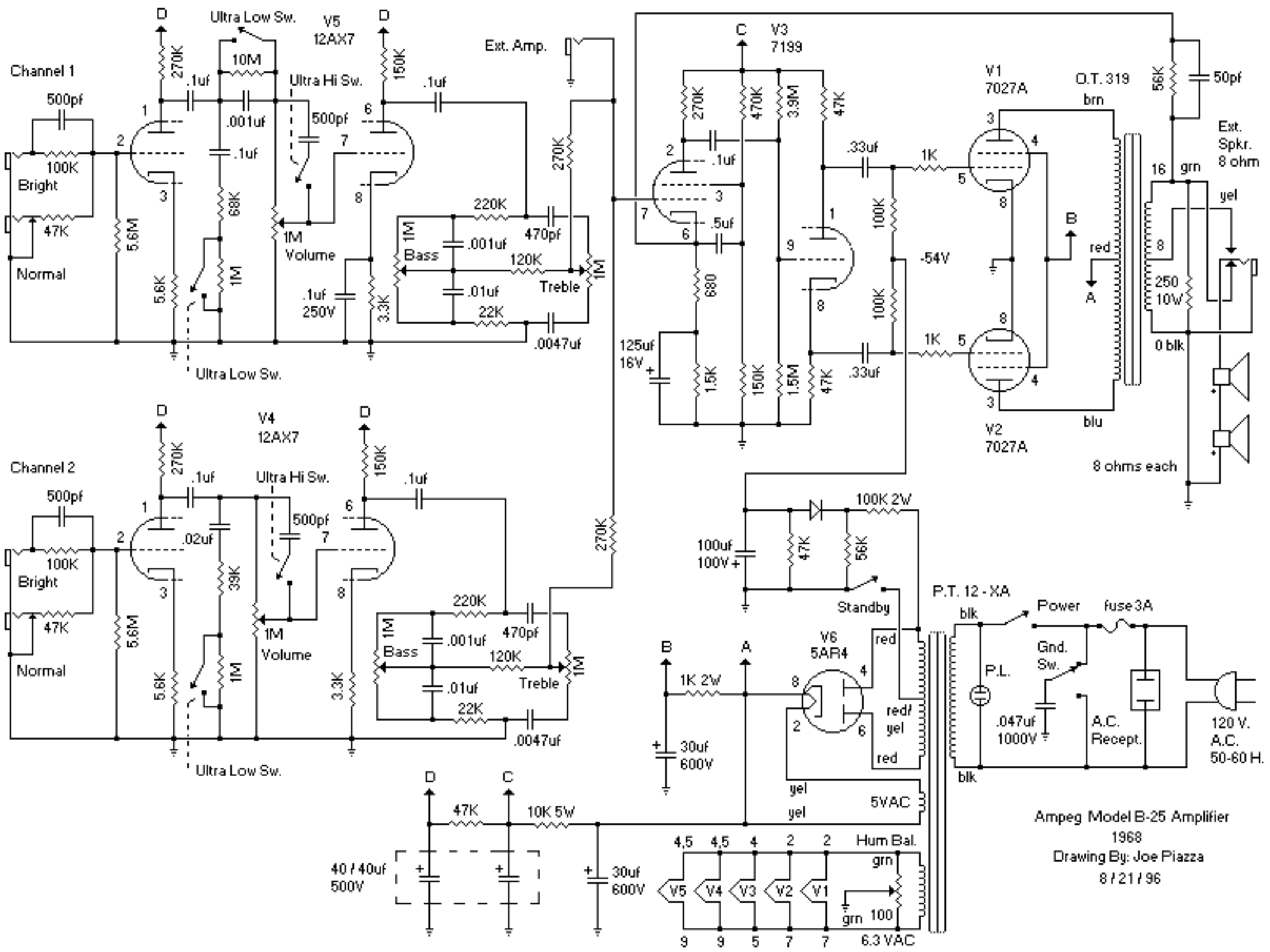
Channel 1
Channel 2
V5
12AX7
V4
12AX7
V3
7199
V1
7027A
V2
7027A
V6
5AR4
O.T. 319
Ext. Amp.
Ext. Spkr. 8 ohm
8 ohms each
Ultra Low Sw.
Ultra Hi Sw.
Bright
Normal
Volume
Bass
Treble
Standby
Power
fuse 3A
P.T. 12 - XA
P.L.
Gnd. Sw.
A.C. Recept.
120 V. A.C. 50-60 H.
5VAC
Hum Bal.
6.3 VAC
-54V
Ampeg Model B-25 Amplifier
1968
Drawing By: Joe Piazza
8 / 21 / 96