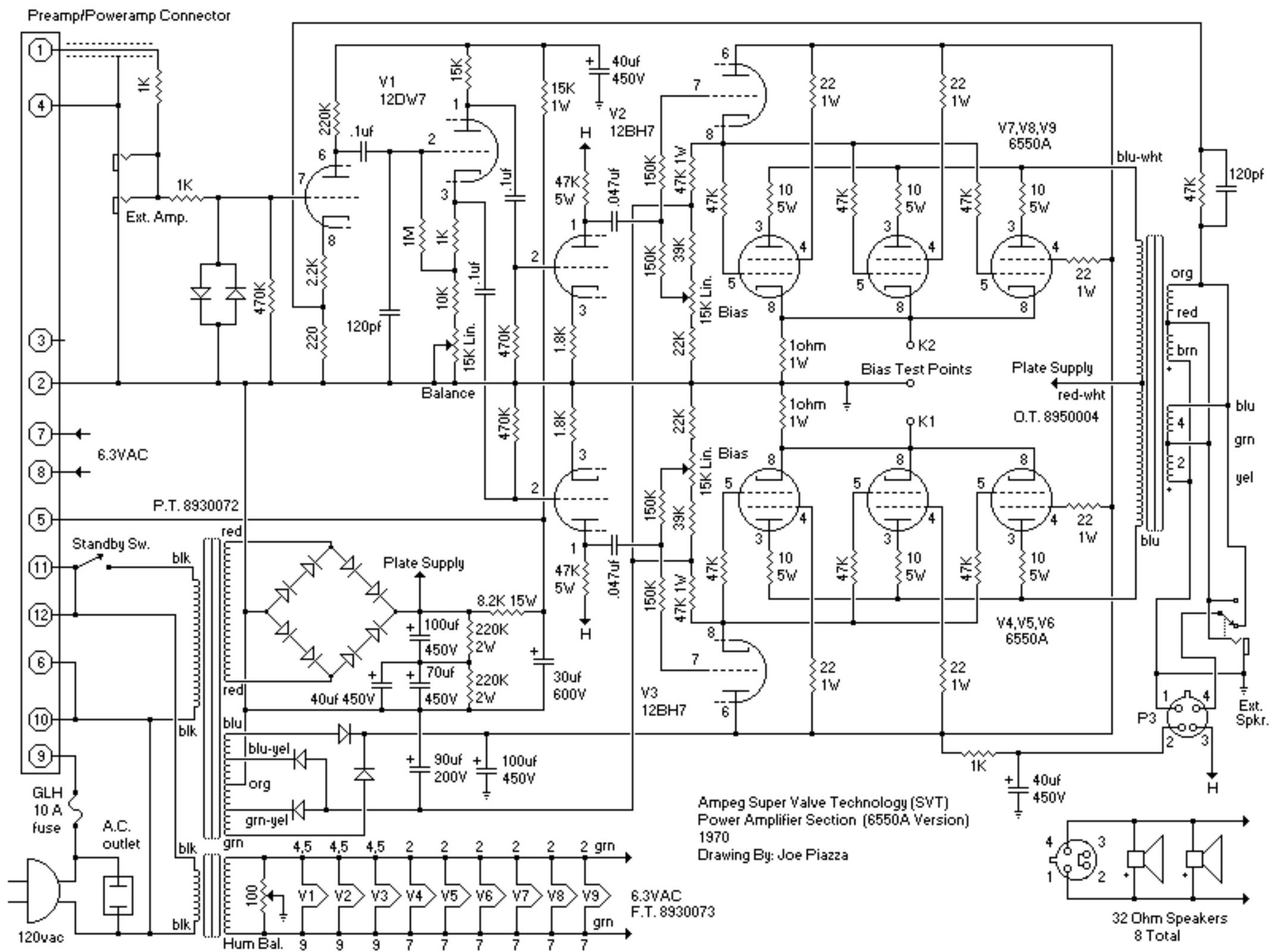
Preamp/Poweramp Connector
Ext. Amp.
1K
V1
12DW7
220K
.1uf
15K
15K 1W
40uf 450V
V2
12BH7
47K 5W
.047uf
150K
47K 1W
39K
15K Lin.
22K
1.8K
470K
2.2K
220
120pf
1M
10K
Balance
Bias
1ohm 1W
Bias Test Points
K1
K2
V7,V8,V9
6550A
V4,V5,V6
6550A
22 1W
10 5W
47K
blu-wht
Plate Supply
red-wht
O.T. 8950004
120pf
org
red
brn
blu
grn
yel
6.3VAC
P.T. 8930072
Standby Sw.
blk
Plate Supply
8.2K 15W
100uf 450V
220K 2W
70uf 450V
40uf 450V
30uf 600V
V3
12BH7
90uf 200V
100uf 450V
blu-yel
org
grn-yel
GLH
10 A
fuse
A.C.
outlet
120vac
grn
4,5
2
100
Hum Bal.
V1
V2
V3
V4
V5
V6
V7
V8
V9
6.3VAC
F.T. 8930073
P3
Ext.
Spkr.
H
Ampeg Super Valve Technology (SVT)
Power Amplifier Section (6550A Version)
1970
Drawing By: Joe Piazza
32 Ohm Speakers
8 Total