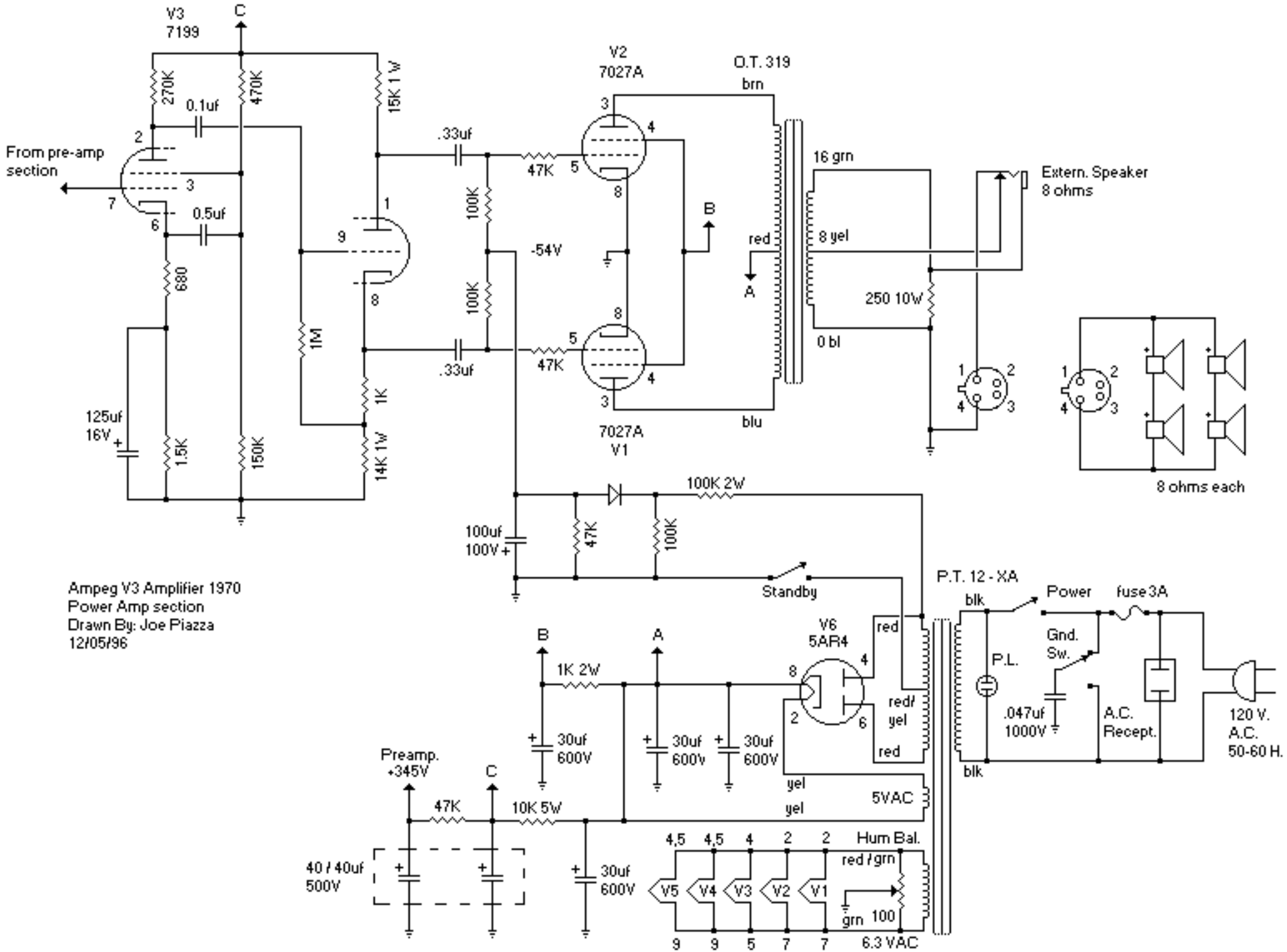
V3
7199
C
270K
470K
15K 1 W
0.1uf
From pre-amp
section
2
3
7
6
0.5uf
680
1M
9
1
8
125uf
16V
1.5K
150K
1K
14K 1W
.33uf
47K
100K
100K
-54V
.33uf
47K
V2
7027A
V1
7027A
B
A
O.T. 319
brn
red
blu
16 grn
8 yel
0 bl
250 10W
Extern. Speaker
8 ohms
8 ohms each
100K 2W
100uf
100V
47K
100K
Standby
Ampeg V3 Amplifier 1970
Power Amp section
Drawn By: Joe Piazza
12/05/96
P.T. 12 - XA
blk
Power
fuse 3A
Gnd.
Sw.
P.L.
.047uf
1000V
A.C.
Recept.
120 V.
A.C.
50-60 H.
blk
V6
5AR4
red
red/
yel
red
yel
yel
5VAC
1K 2W
30uf
600V
30uf
600V
30uf
600V
Preamp.
+345V
47K
10K 5W
40 / 40uf
500V
30uf
600V
4,5
4,5
4
2
2
Hum Bal.
red / grn
V5
V4
V3
V2
V1
grn
100
9
9
5
7
7
6.3 VAC