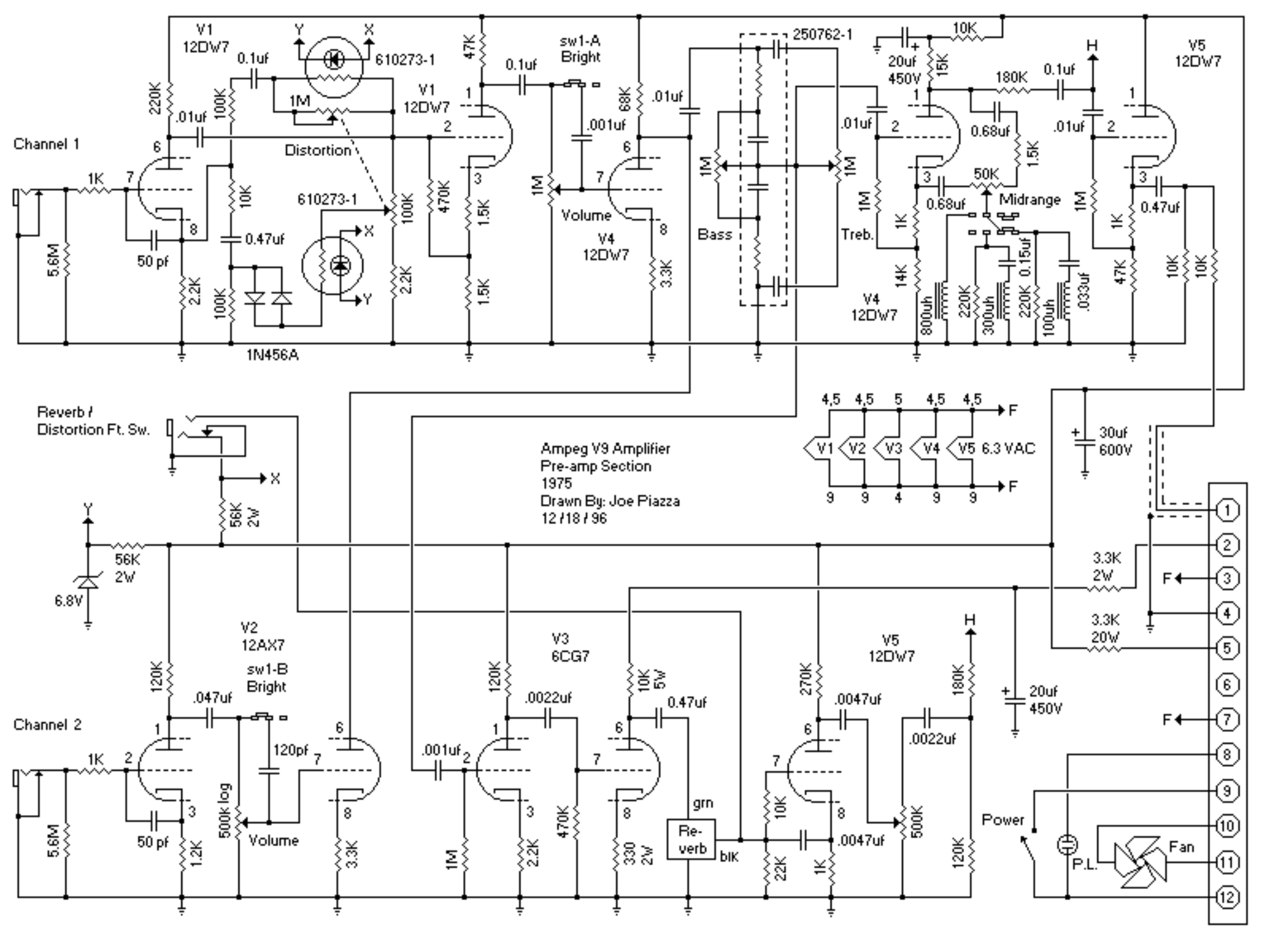
Ampeg V9 Amplifier
Pre-amp Section
1975
Drawn By: Joe Piazza
12/18/96
Channel 1
Channel 2
V1
12DW7
V2
12AX7
V3
6CG7
V4
12DW7
V5
12DW7
610273-1
250762-1
sw1-A
Bright
sw1-B
Bright
Distortion
Volume
Bass
Treb.
Midrange
Reverb /
Distortion Ft. Sw.
Re-
verb
grn
blk
Power
P.L.
Fan
1N456A
6.3 VAC
30uf
600V
20uf
450V
3.3K
2W
3.3K
20W
56K
2W
6.8V