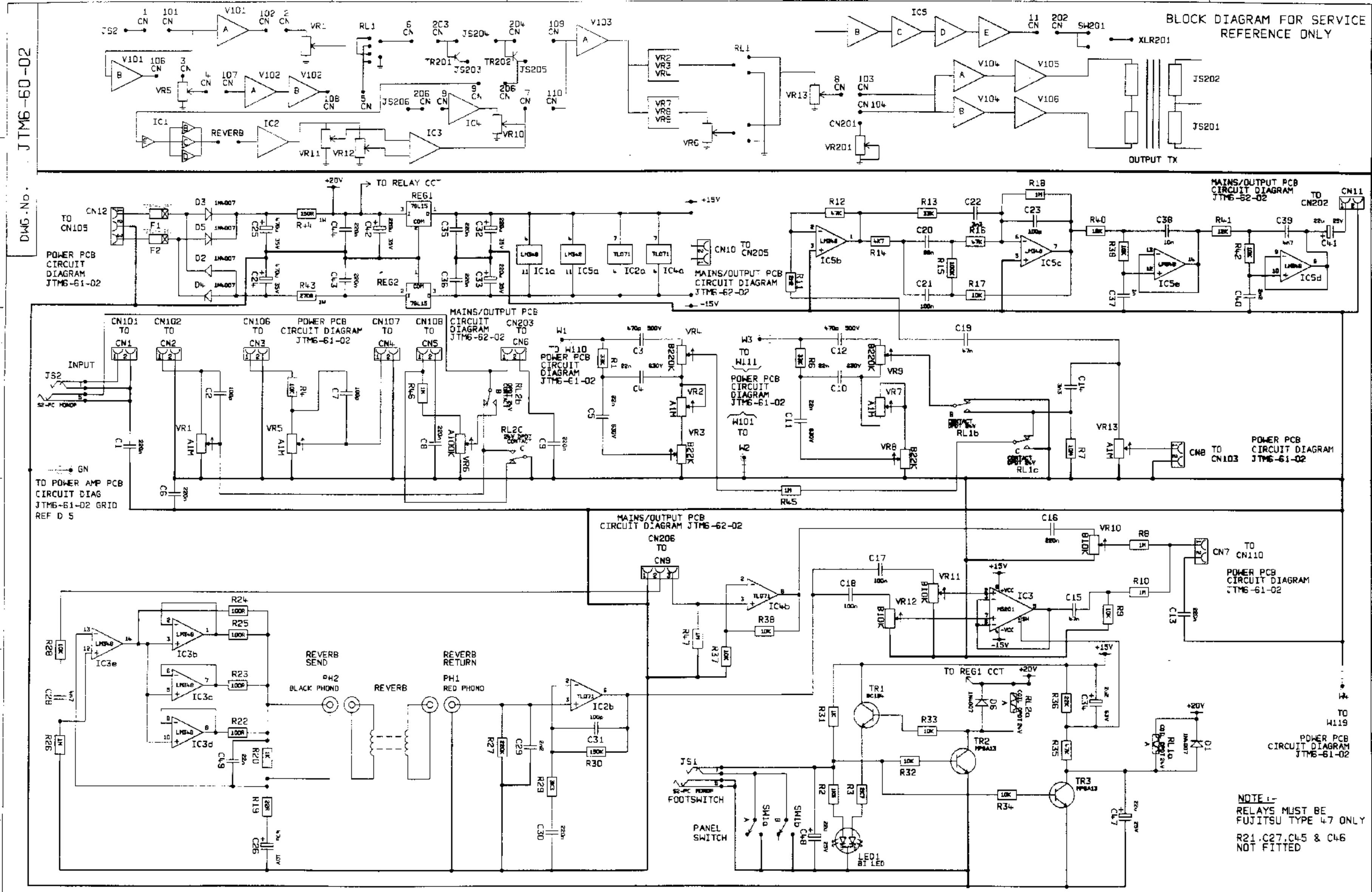

ISS	ECO NUMBER	DATE
4	1215	28-6-96
3	1114	
2	1040	16/11/95
1		04/05/95

ALL OTHER HOLES • X = (THROUGH PLATED)

A			E			J			N		
B			F			K			P		
C			G			L			Q		
D			H			M			R		

RSB	04/05/95
JG	2-7-96

JTM60

Marshall

© JIM MARSHALL (PRODUCTS) LTD.
DENBIGH ROAD, BLETCHLEY, MILTON KEYNES, MK1 1DQ.
TEL (0908)375411 FAX (0908)376118

TITLE PRE-AMP PCB CIRCUIT DIAGRAM

DWG.No JTM6-60-02 ISS 4